HW9 The SAR Block (sequencer and code register)

1. Build the following DFF, add a SET function to it, verify the functionality using LTSpice. Use the C5 model file. (50 points)

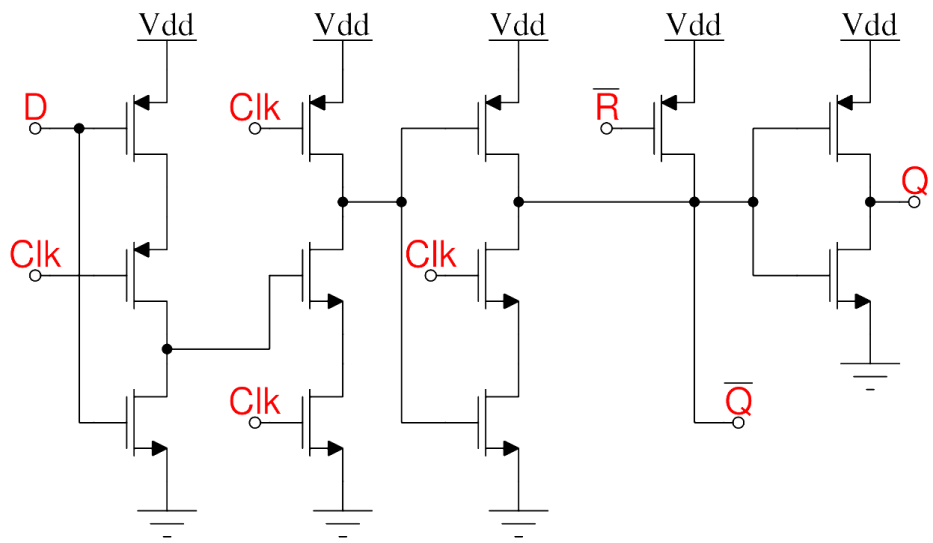
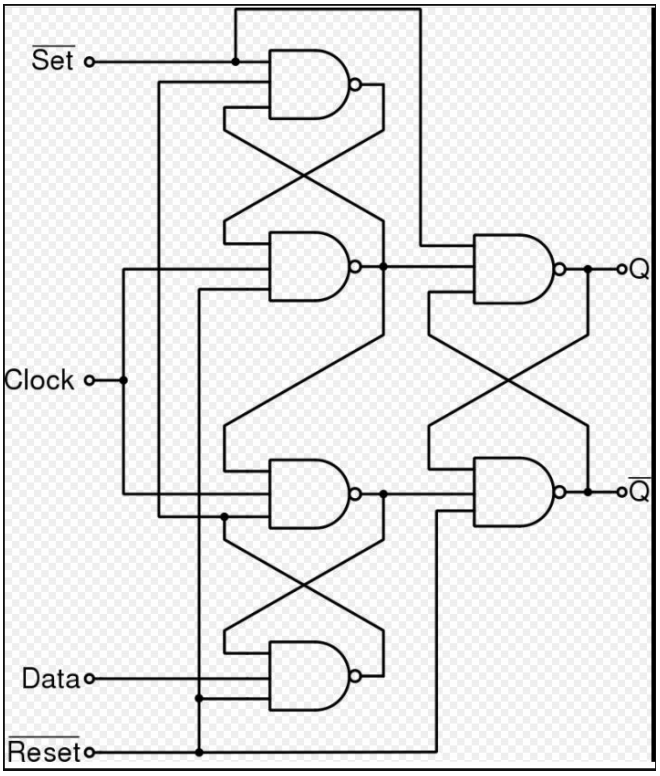
2. Build the following DFF, verify the functionality using LTSpice. Use the C5 model file. (50 points).