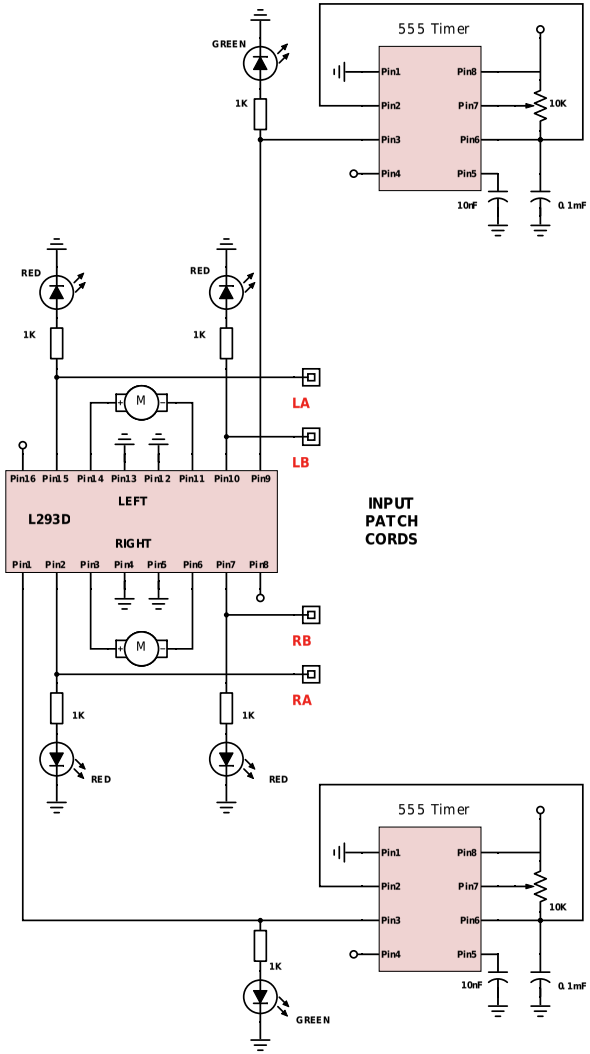

Obstacle Avoider

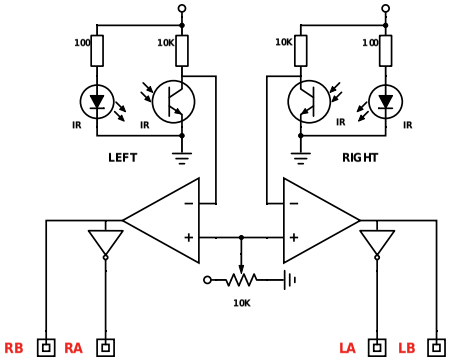

OUTPUT PATCH CORDS
Connect same label output to input

Edge Avoider

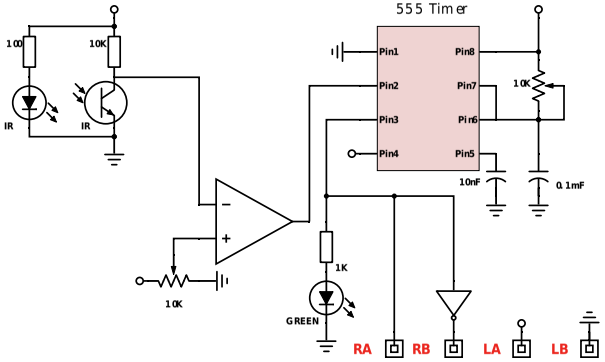

OUTPUT PATCH CORDS
Connect same label output to input

OUTPUT PATCH CORDS
Connect same label output to input

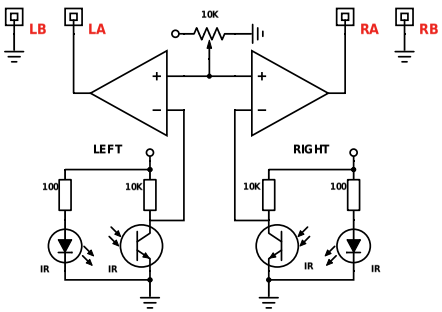

Line Follower

OUTPUT PATCH CORDS
Connect same label output to input

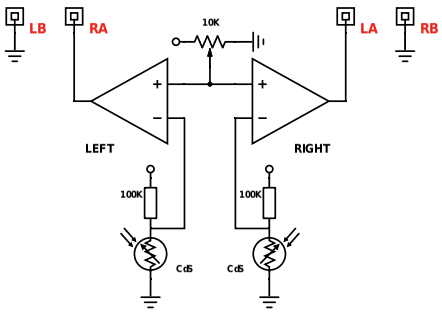

Light Follower